LBX

IP65 IK09

Contemporary wayfaring finding fixture for glare free visual comfort. Sophisticated design that looks beautiful in both daytime and nightime.

Luminaire Structure

- Die-cast aluminium housing
- Extruded aluminium column
- Pre-treated before powder coating ensuring high corrosion resistance
- Single cable entry
- One IP68 connector supplied with 0.2 m of 3x1.0 sqmm outdoor cable
- Stainless steel fasteners in grade 304 with zinc flake coating (ZFC)
- Durable silicone rubber gasket
- High-efficiency optical reflector
- Clear toughened glass
- Integral control gear

Feature

Light symbol

G

Product colour

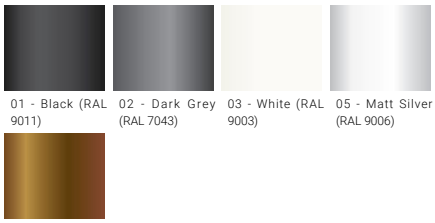

01 - Black (RAL 9011)
02 - Dark Grey (RAL 7043)
03 - White (RAL 9003)
05 - Matt Silver (RAL 9006)
06 - Bronze (RAL 6014)

Special finishes upon request

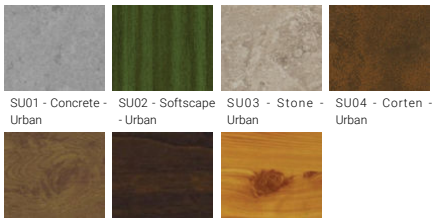

SU01 - Concrete - Urban
SU02 - Softscape - Urban
SU03 - Stone - Urban
SU04 - Corten - Urban
SW01 - Oak - Woodland
SW02 - Walnut - Woodland
SW03 - Pine - Woodland

We reserve the right to make technical and design changes.

01:18, 16-05-2022

https://www.ligman.com/lbx-bollards-lb-bo3/

Europe
LIGMAN EUROPE s.r.o.
VGP Park Ústí nad Labem
P 2 120
40317, Přestanov
Czech Republic
+420 477 071 500
sales.cz@ligman.com

ASIA PACIFIC
LIGMAN Lighting Co.,Ltd.
17/2 Moo4 Monthong
Bangnampreaw
24150, Chachoengsao
Thailand
+66 2 108 6700
info@ligman.com

LBX

Technical information

	Model number	Light source	Power	Lumen	Optic	CCT / CRI	Dimming type	Weight
102x102 mm - 450 mm								
LBX 5	**LB-10851**	1 COB	14 W	423 - 453 lm	G [27°x47°]	3000K, 4000K	DALI, On/Off	2.62 kg
160x160 mm - 800 mm								
LBX 6	**LB-10842**	1 COB	21 W	889 - 900 lm	G [35°x58°]	3000K CRI80, 4000K CRI80	DALI, 1-10V, On/Off	8.50 kg
186x186 mm - 800 mm								
LBX 7	**LB-10861**	1 COB	27 W	1523 - 1553 lm	G [36°x60°]	3000K, 4000K	DALI, 1-10V, On/Off	7.70 kg

Accessories

	Anchor bolt **A11091**	Anchor bolt **A11891**	Anchor bolt **A11991**	DALI Control System **Control-DALI**
LB-10842	•			•
LB-10851		•		•
LB-10861			•	•

We reserve the right to make technical and design changes.

01:18, 16-05-2022

https://www.ligman.com/lbx-bollards-lb-bo3/

Europe
LIGMAN EUROPE s.r.o.
VGP Park Ústí nad Labem
P 2 120
40317, Přestanov
Czech Republic
+420 477 071 500
sales.cz@ligman.com

ASIA PACIFIC
LIGMAN Lighting Co.,Ltd.
17/2 Moo4 Monthong
Bangnampreaw
24150, Chachoengsao
Thailand
+66 2 108 6700
info@ligman.com

LBX

LBX

LBX 5

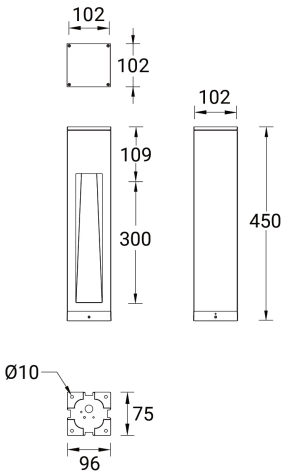

Mounting detail

LBX 6

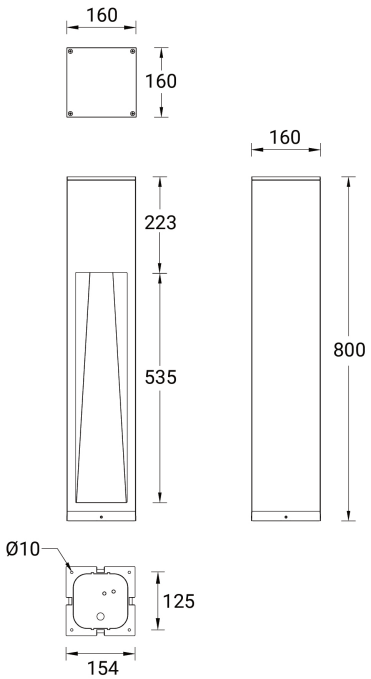

Mounting detail

LBX 7

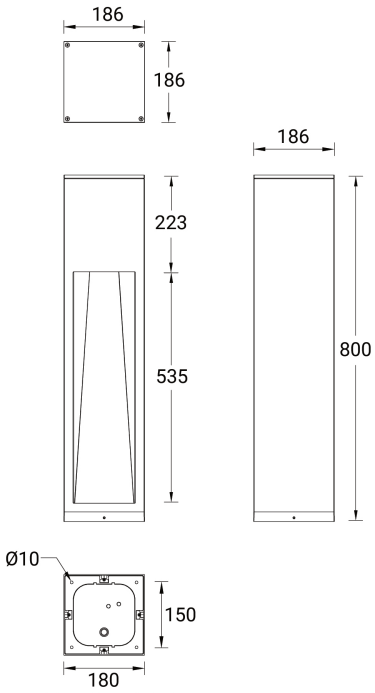

Mounting detail

We reserve the right to make technical and design changes.

01:18, 16-05-2022

https://www.ligman.com/lbx-bollards-lb-bo3/

Europe
LIGMAN EUROPE s.r.o.
VGP Park Ústí nad Labem
P 2 120
40317, Přestanov
Czech Republic
+420 477 071 500
sales.cz@ligman.com

ASIA PACIFIC
LIGMAN Lighting Co.,Ltd.
17/2 Moo4 Monthong
Bangnampreaw
24150, Chachoengsao
Thailand
+66 2 108 6700
info@ligman.com

LBX

LBX
Recessed luminaires

Contemporary way finding fixture for glare free visual comfort. Sophisticated design, with minimal footprint and available with optional surrounds and supply solutions.

https://www.ligman.com/lbx-recessed-luminaires-lb-re3/

We reserve the right to make technical and design changes.

01:18, 16-05-2022

https://www.ligman.com/lbx-bollards-lb-bo3/

Europe
LIGMAN EUROPE s.r.o.
VGP Park Ústí nad Labem
P 2 120
40317, Přestanov
Czech Republic
+420 477 071 500
sales.cz@ligman.com

ASIA PACIFIC
LIGMAN Lighting Co.,Ltd.
17/2 Moo4 Monthong
Bangnampreaw
24150, Chachoengsao
Thailand
+66 2 108 6700
info@ligman.com